KUBEBATH
AFFORDABLE LUXURY FOR YOUR BATHROOM

FSKWMLC32

NOTE: DIMENSIONS AND TECHNICAL DETAILS ARE SUBJECT TO CHANGE WITHOUT NOTICE
more info: www.kubebath.com

Measurements for the cabinet only

Dimensions:	width	depth	height
inches	31.3"	20.3"	35"
mm	796	515	889

COUTERTOP SKU# **LUMI32SINK-MW**

FRONT VIEW

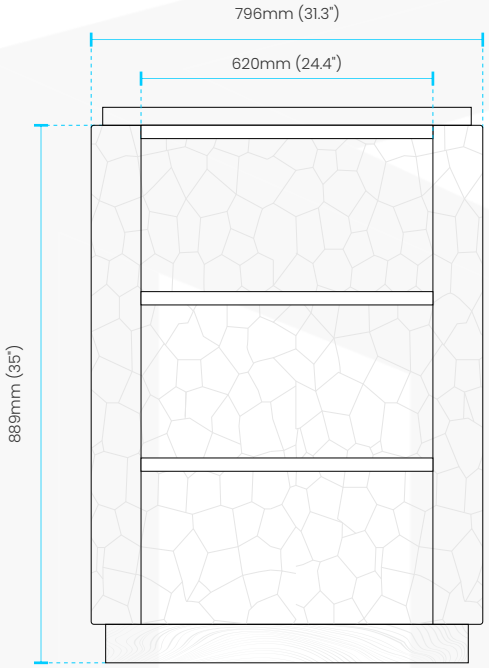

SIDE VIEW

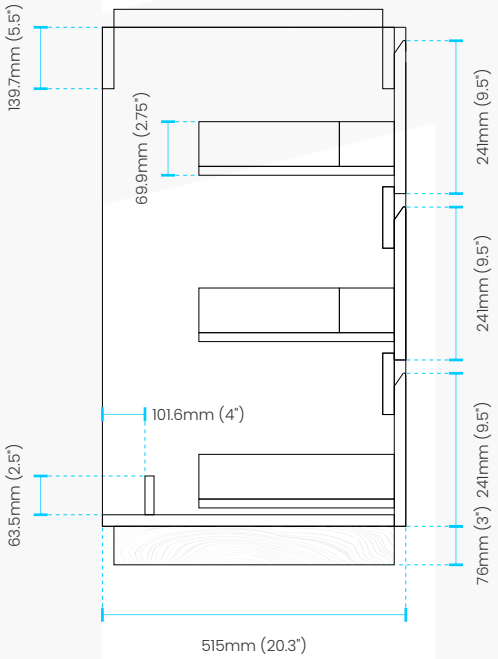

TOP VIEW

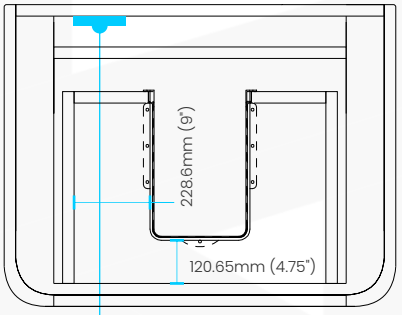

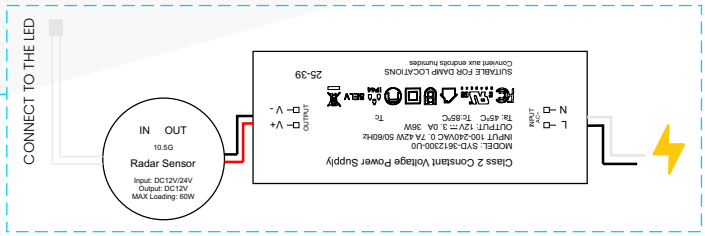

All rights reserved. The authors retain all copyrights in any text, graphic images and photos in this book. No part of this publication may be reproduced or transmitted in any form or by any means, electronic or mechanical, including photocopying, recording, or any information storage and retrieval system, without permission in writing from the authors.

KUBEBATH
AFFORDABLE LUXURY FOR YOUR BATHROOM

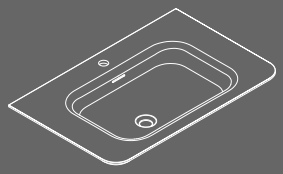

LUMI32SINK-MW

NOTE: DIMENSIONS AND TECHNICAL DETAILS ARE SUBJECT TO CHANGE WITHOUT NOTICE
more info: www.kubebath.com

Dimensions:	width	depth	height
inches	31.89"	20.47"	7.09"
mm	810	520	180

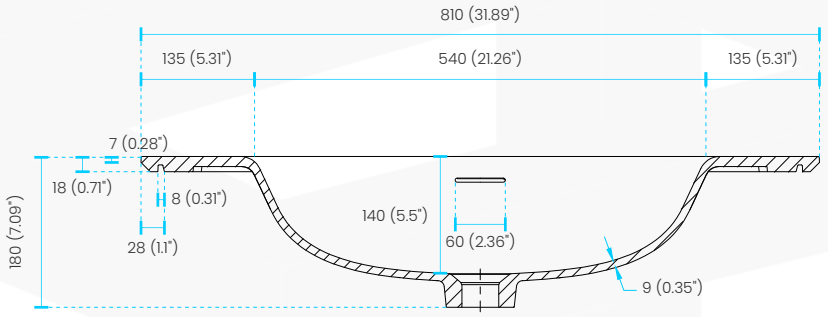

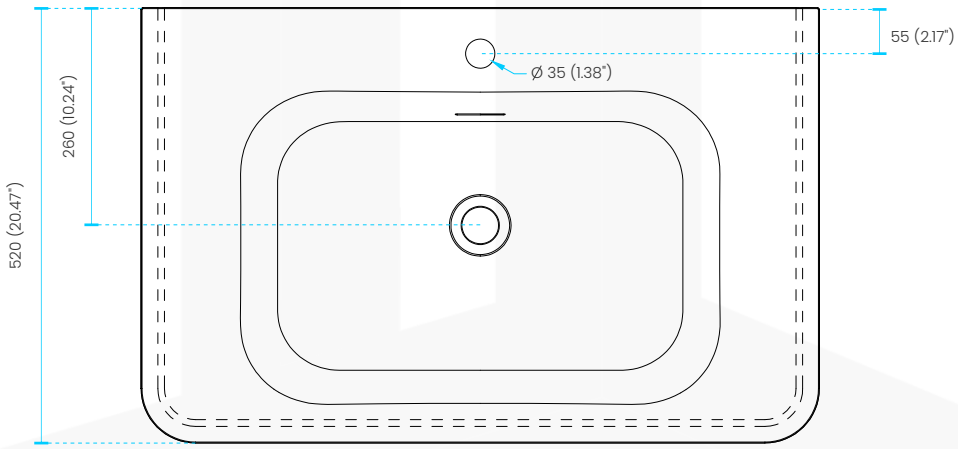

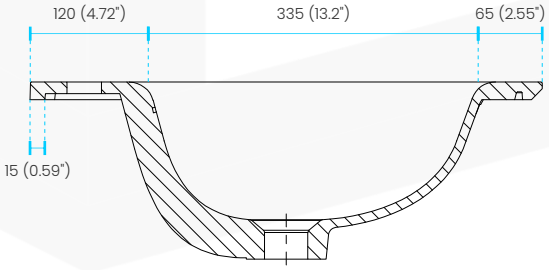

All rights reserved. The authors retain all copyrights in any text, graphic images and photos in this book. No part of this publication may be reproduced or transmitted in any form or by any means, electronic or mechanical, including photocopying, recording, or any information storage and retrieval system, without permission in writing from the authors.